mm [inch]

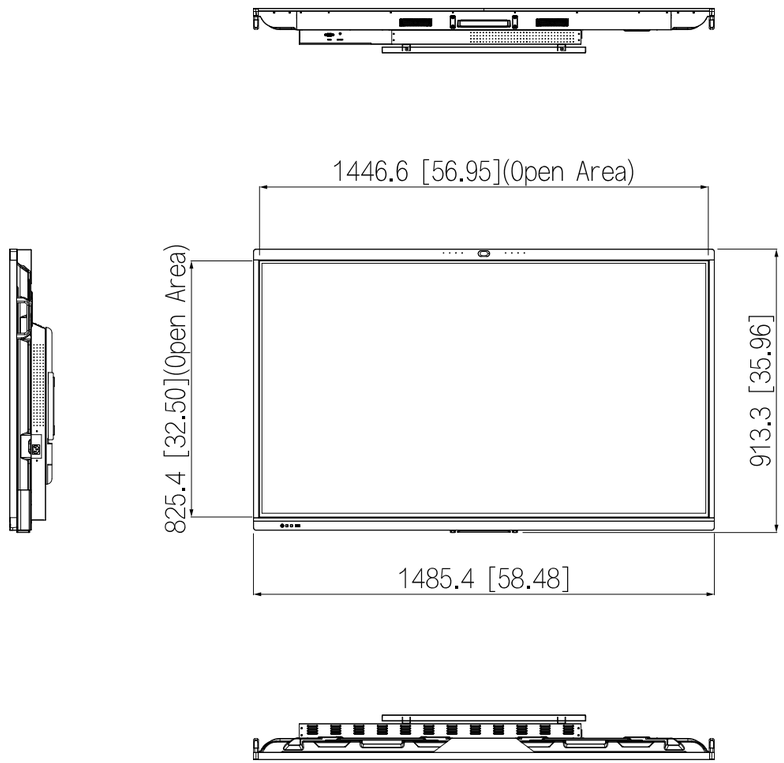
1446.6 [56.95](Open Area)
825.4 [32.50](Open Area)
913.3 [35.96]
1485.4 [58.48]

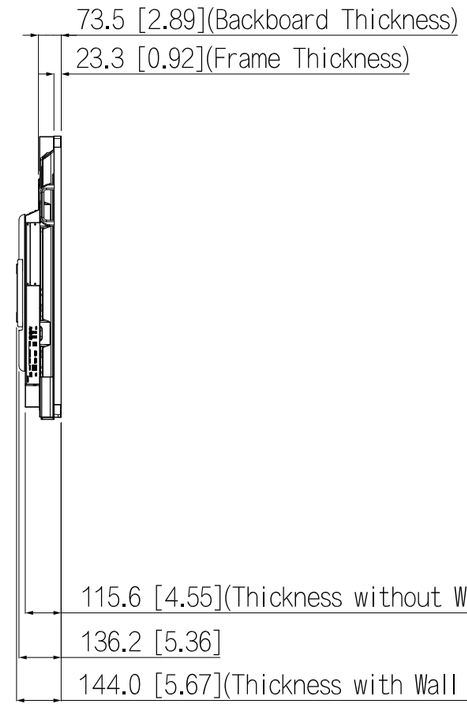
73.5 [2.89](Backboard Thickness)
23.3 [0.92](Frame Thickness)
115.6 [4.55](Thickness without Wall Mount Bracket)
136.2 [5.36]
144.0 [5.67](Thickness with Wall Mount Bracket)

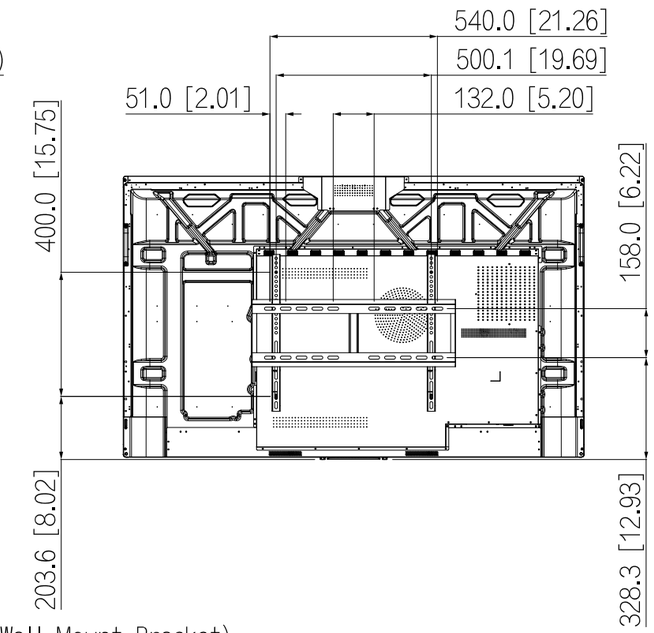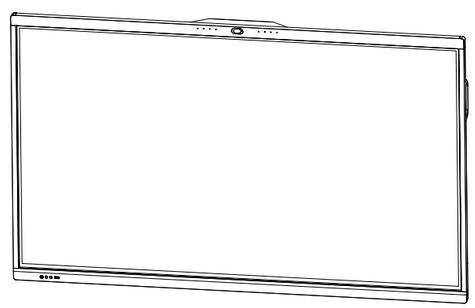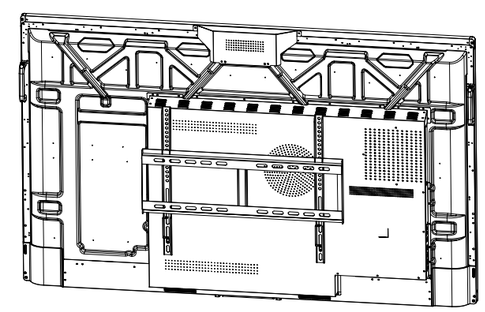
540.0 [21.26]
500.1 [19.69]
51.0 [2.01]
132.0 [5.20]
400.0 [15.75]
158.0 [6.22]
203.6 [8.02]
328.3 [12.93]